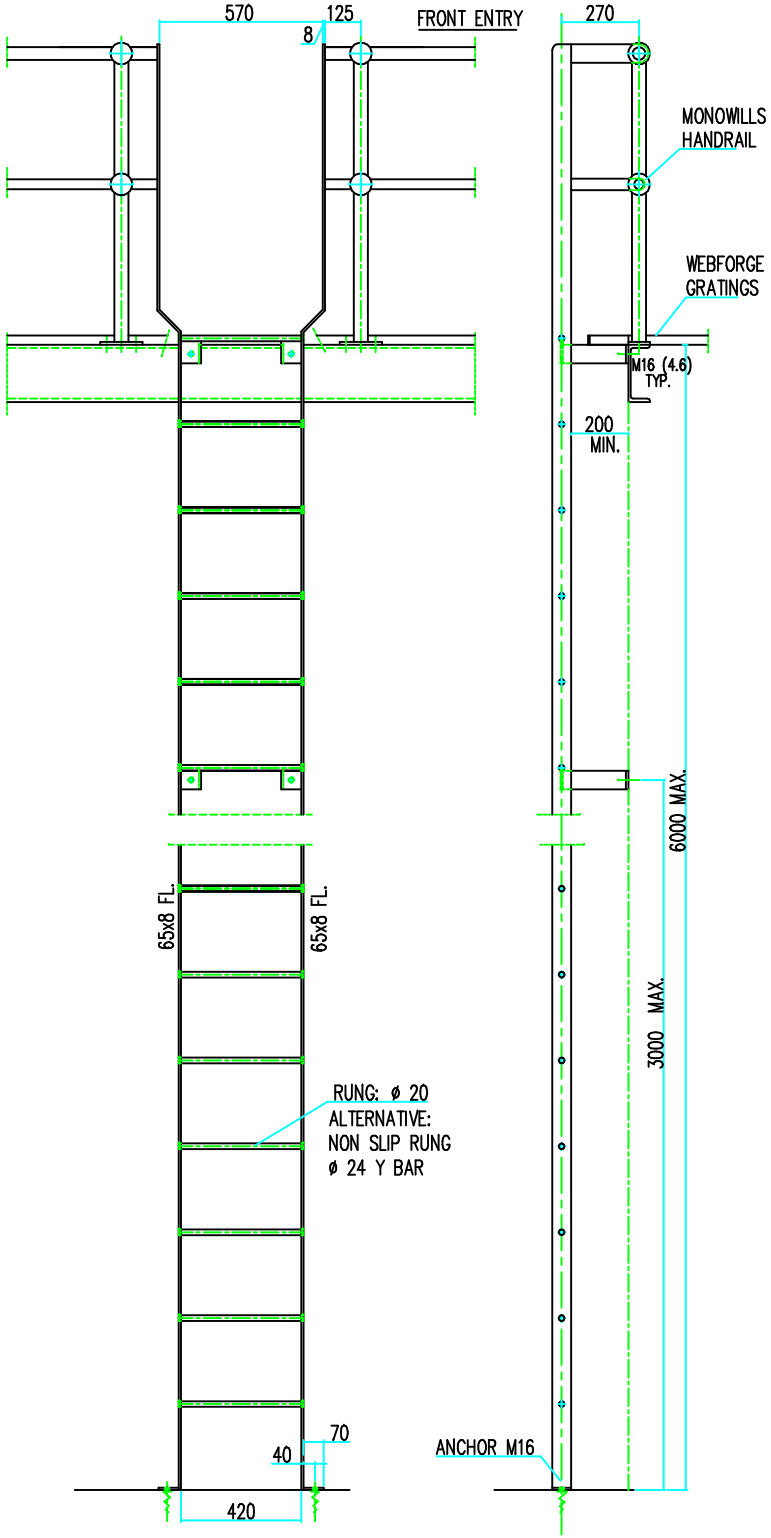

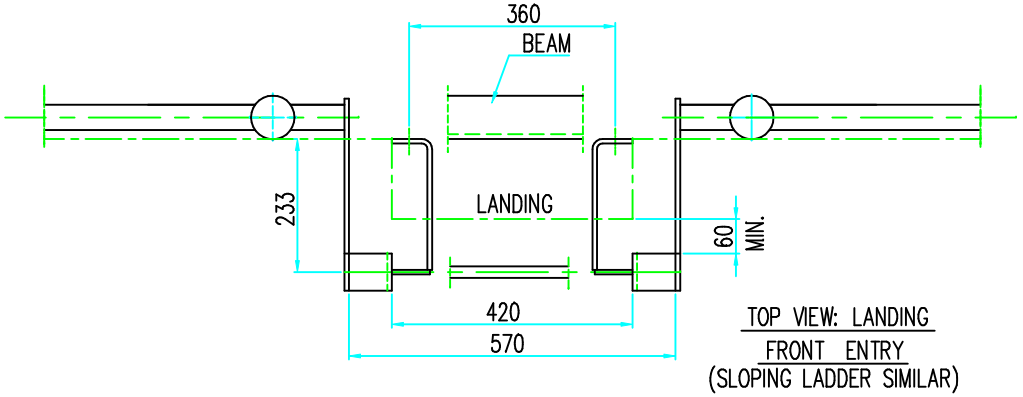

ITEM	QTY	SECTION	LENGTH	HOLES	REMARKS

HALLWELD-BENNETT P/L
A.B.N.56 008 123 037
14 NINTH ST.
WINGFIELD S.A. 5013
PH.(08) 83470800 FAX (08)83470230

Titan
TOTAL ACCESS & SAFETY SYSTEMS
" ACCESS SYSTEMS "

DRN. DRu. 13.05.99
CLIENT
WELD
CONTRACT
VERTICAL RUNG LADDER (FRONT ENTRY)
SCALE 1:10 1:20
FINISH
JOB NO.
DRG. NO. HB-L-01