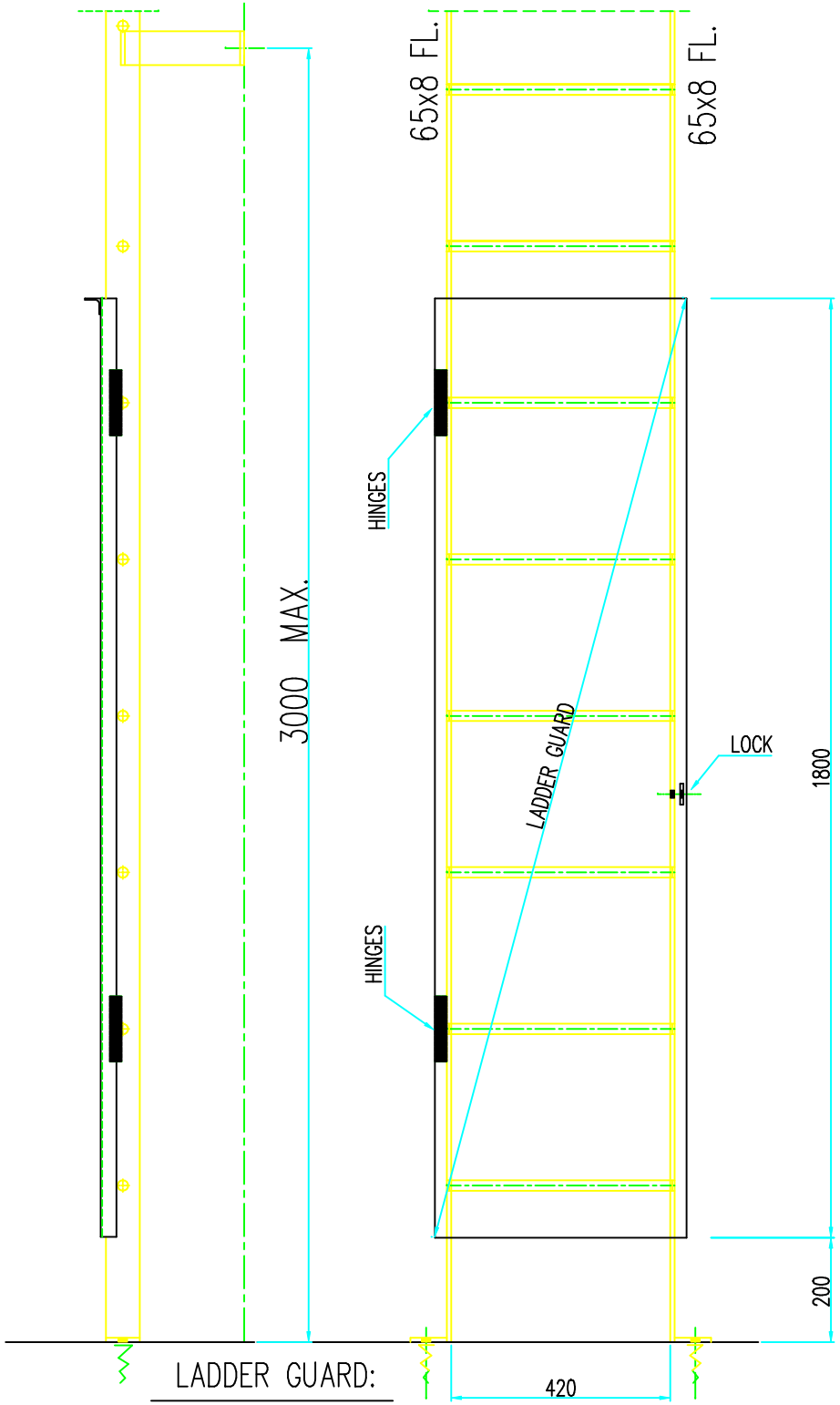

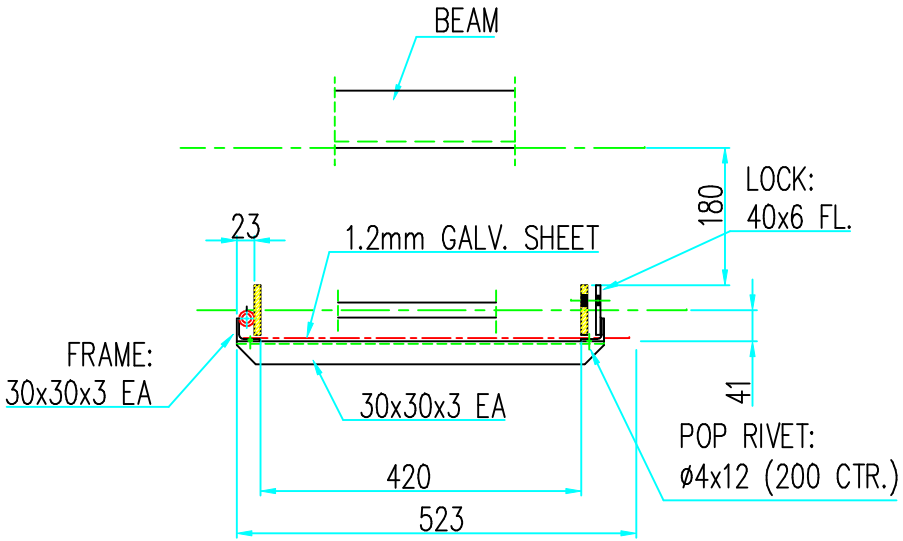

ITEM	QTY	SECTION	LENGTH	HOLES	REMARKS

HALLWELD-BENNETT P/L
A.B.N.56 008 123 037
14 NINTH ST.
WINGFIELD S.A. 5013
PH.(08) 83470800 FAX (08)83470230

Titan
TOTAL ACCESS & SAFETY SYSTEMS
" ACCESS SYSTEMS "

DRN. DRu. 18.09.00	CLIENT
WELD	CONTRACT LADDER GUARD
SCALE 1:10 1:7.5	FINISH
	JOB NO. / DRG. NO. HB-LG-02